LG320240C-DW 4.7", 320 x 240 dots + white led backlight, 8-bit parallel, 3.3V or 5V, built-in Chinese font

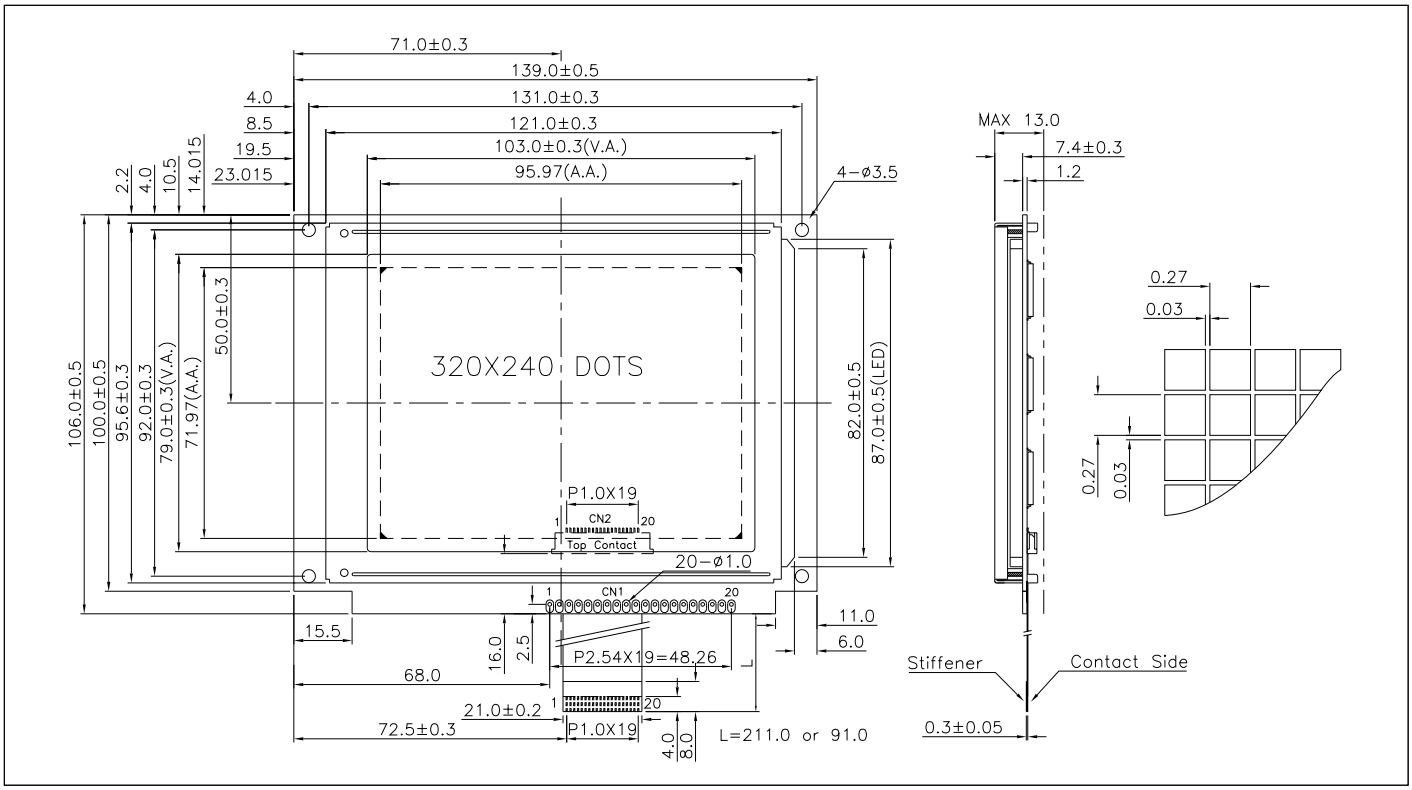

ABSOLUTE MAXIMUM RATINGS

Item	Symbol	Min.	Max.	Unit
Supply Voltage(Logic)	V_{DD}- V_{SS}	-0.3	6.0	V
Supply Voltage(LCD)	V_{DD}- V_O	-0.3	30.0	V
Input Voltage	V_I	-0.3	V_{DD}+ 0.3	V
Operating Temp.	T_{opr}	-20	70	°C
Storage Temp.	T_{stg}	-30	80	°C

MECHANICAL DATA

Item	Nominal Dimensions	Unit
Module Size (W x H x T)	139.0 x 106.0 x 13.0	mm
Viewing Area (W x H)	103.0 x 79.0	mm
Dot Pitch (W x H)	0.30 x 0.30	mm
Dot Size (W x H)	0.27 x 0.27	mm
Weight	Approx. 175	g

ELECTRICAL CHARACTERISTICS (V_{DD}=3.3V or 5V)

Item	Symbol	Test Condition	Min.	Typ.	Max.	Unit
Input High Voltage	V_{IH}	--	0.8V_{DD}	--	V_{DD}	V
Input Low Voltage	V_{IL}	--	0	--	0.2V_{DD}	V
Supply Current	I_{DD}	V_{DD} = 5.0V	--	30.0	60.0	mA
		V_{DD} = 3.3V	--	40.0	70.0	mA
LCD Driving Voltage	V_{DD} - V_O	Ta=25°C	--	22.7	--	V

PIN CONNECTIONS (CN1/CN2)

Pin	Symbol	Level	Function
1	V_{SS}	0V	GND
2	V_{DD}	3.3 or 5V	Power supply for logic
3	V_O	--	Operating voltage for LCD
4	RS	H/L	L : Data H : Instruction code
5	/WR(R/W)	H/L	/WR for 80 MPU, R/W for 68 MPU
6	/RD(E)	H/L	/RD for 80 MPU, E for 68 MPU
7	DB0	H/L	Data bus
8	DB1	H/L	
9	DB2	H/L	
10	DB3	H/L	
11	DB4	H/L	
12	DB5	H/L	
13	DB6	H/L	
14	DB7	H/L	
15	/CS	L	Chip enable singal. Active "L".
16	/RST	L	Reset signal. Active "L".
17	V_{OUT}	-22V	Output voltage for LCD driving
18	INT	H/L	Interrupt signal output
19	LEDA	5V	Power supply for LED backlight
20	LEDK	0V	

BLOCK DIAGRAM

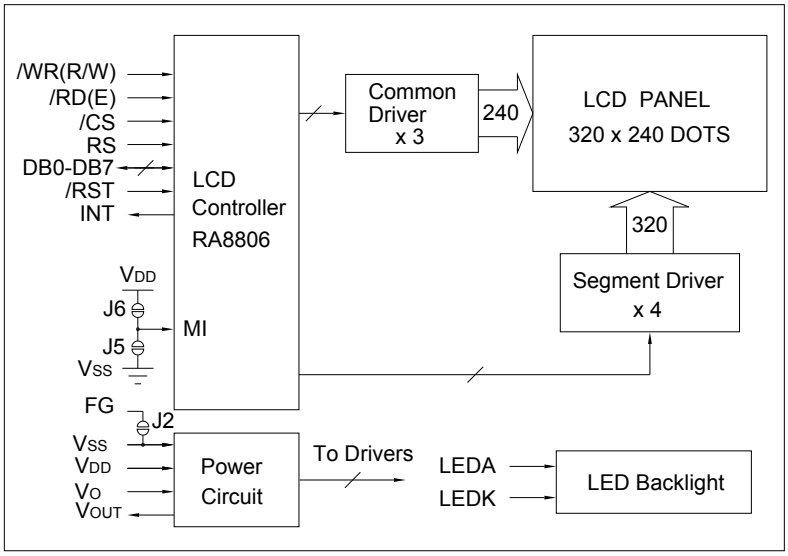

LED BACKLIGHT SPECIFICATIONS (Ta=25°C)

Item	Symbol	Typ.	Max.	Unit
Forward Voltage	V_f	3.1	3.3	V
Forward Current	I_f	105	--	mA
LED Color	White			